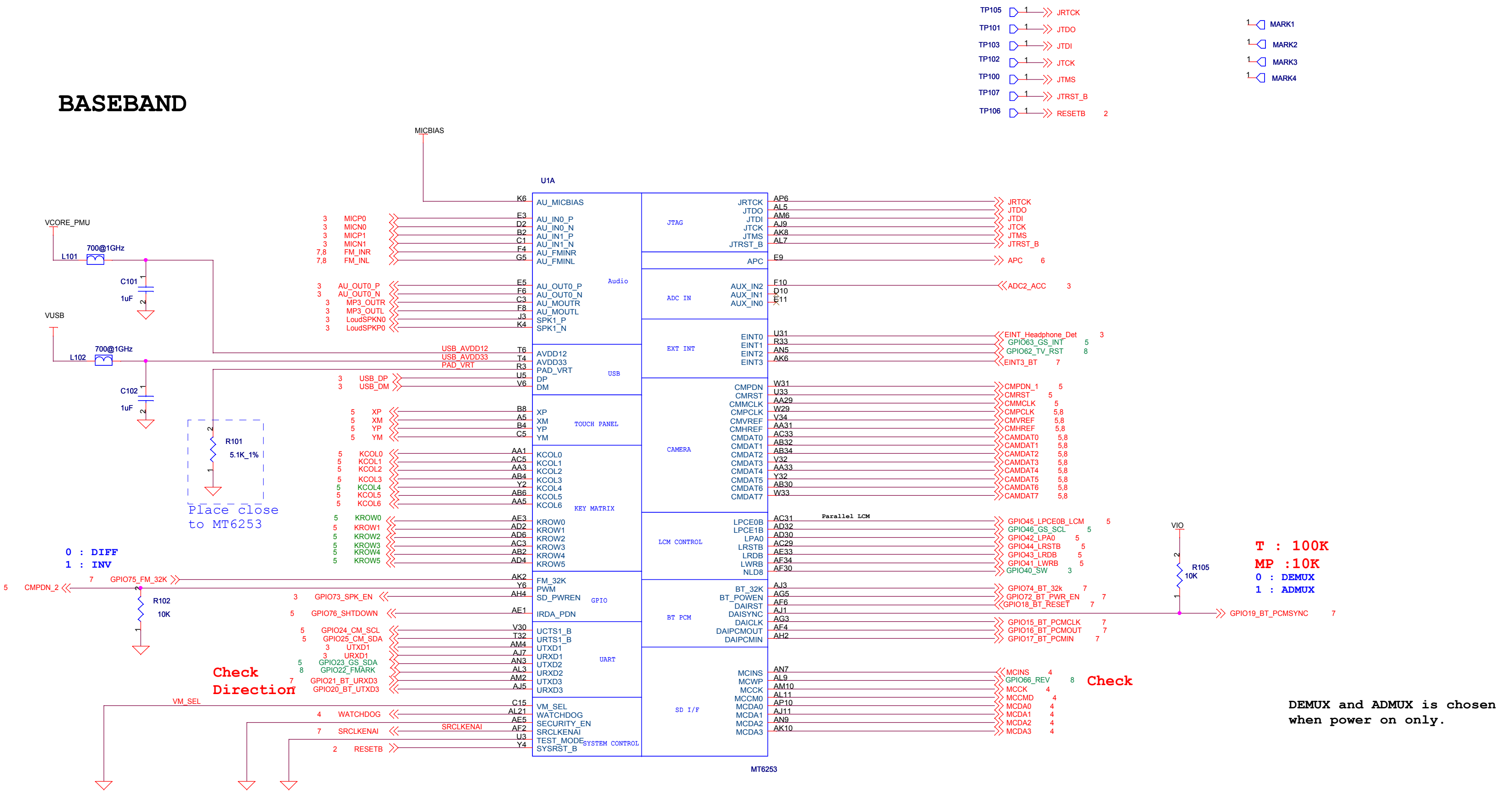

LZ 0628 DELETE KCOL4;
ADC0_LCM_ID

LZ 0626 change KCOL5 tobe FM SCL;
Add KROW4,Krow5, in according to Konka's SCH;
LZ 0701 DELETE FM_32K CLK;
LZ 0702 DELETE SECRITY_EN NET;

I2S Application Note:

I2S_WS	Pin. AE1/IRDA_PDN
I2S_DATA	Pin AN3UTXD2
I2S_CLK	Pin AF30/NLD8

Title	01 Baseband (MT6253)	
Size A2	Document Number: MT6253 Beta Site Phone	Rev V3.0
Date: Tuesday, April 20, 2010	Sheet 1 of 9	

BASEBAND-POWER

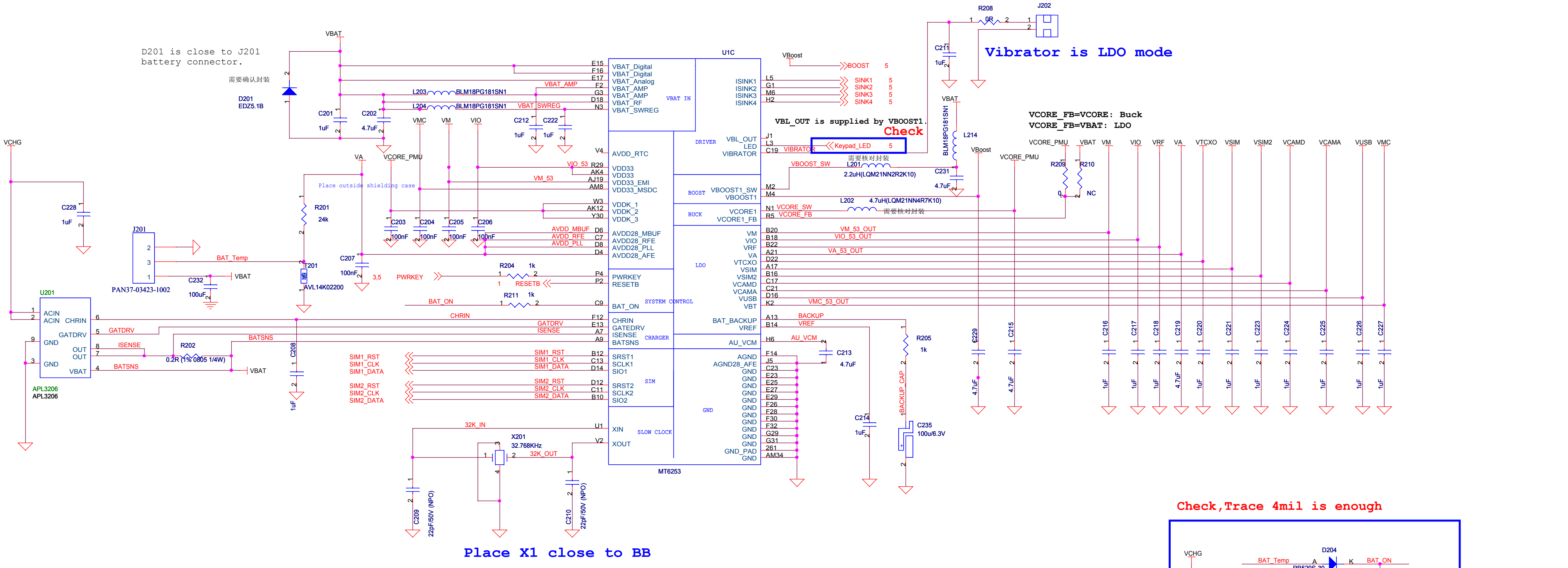

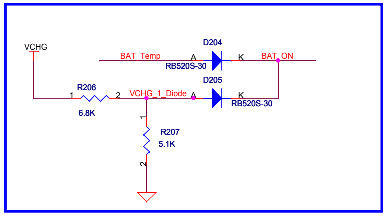

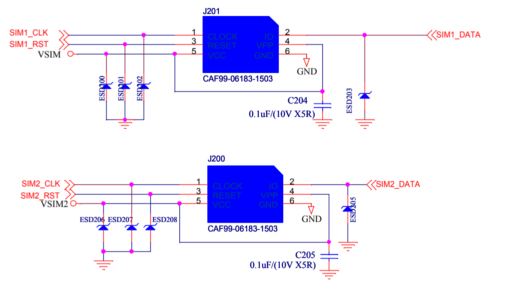

	Symbol	Vout (V)	Iout (mA)	Setting
Buck	VCORE	1.2	200	
RF LDO	VRF	2.8	200	
Analog LDO	VTCXO	2.8	20	
	VA	2.8	125	
	VCAM_A	1.5/1.8/2.5/2.8	150	
Digital LDO	VM	1.8/2.8	200	VM_SEL
	VIO	2.8	100	
	VSIM	1.8/3.0	100	
	VUSB	3.3	100	
	VBT	1.3/1.5/1.8/2.5/2.8/3.0/3.3	100	
	VCAM_D	1.3/1.5/1.8/2.5/2.8/3.0/3.3	100	
	VSIM2	1.3/1.5/1.8/2.5/2.8/3.0/3.3	100	
Vibrator	VIBR	1.8/3.0	200	
RTC	VBACKUP	2.8	2	
Boost Converter	VBOOST1	3.4~5.5	100	

Title: 02 Power & PMIC (MT6253)
Size: A2 | Document Number: MT6253 Beta Site Phone | Rev: V3.0
Date: Tuesday, April 20, 2010 | Sheet 2 of 9

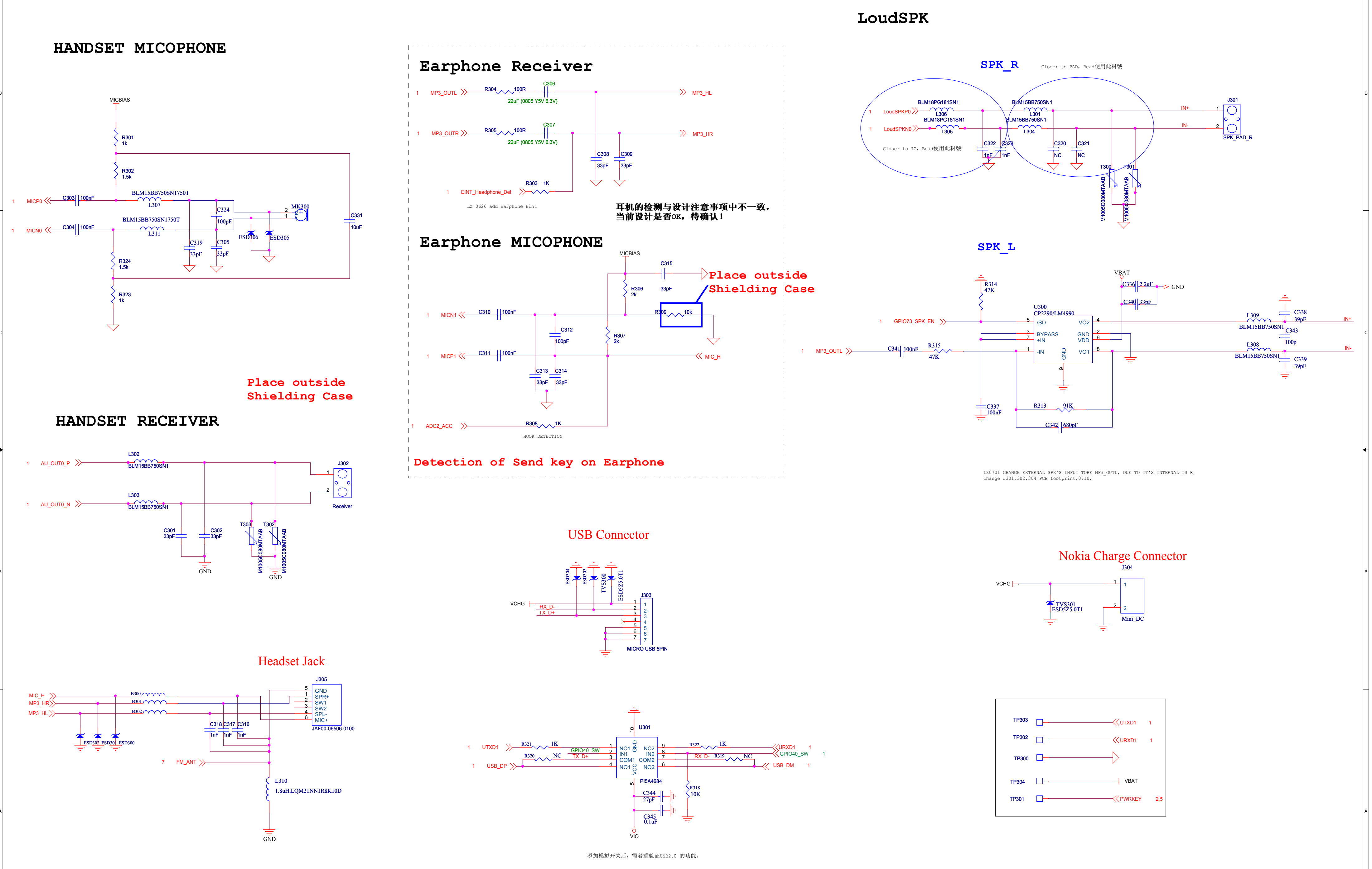

Title	03 Audio, I/O, USB 2.0
Size A2	Document Number: MT6253 Beta Site Phone — Rev V3.0
Date: Tuesday, April 20, 2010	Sheet 3 of 9

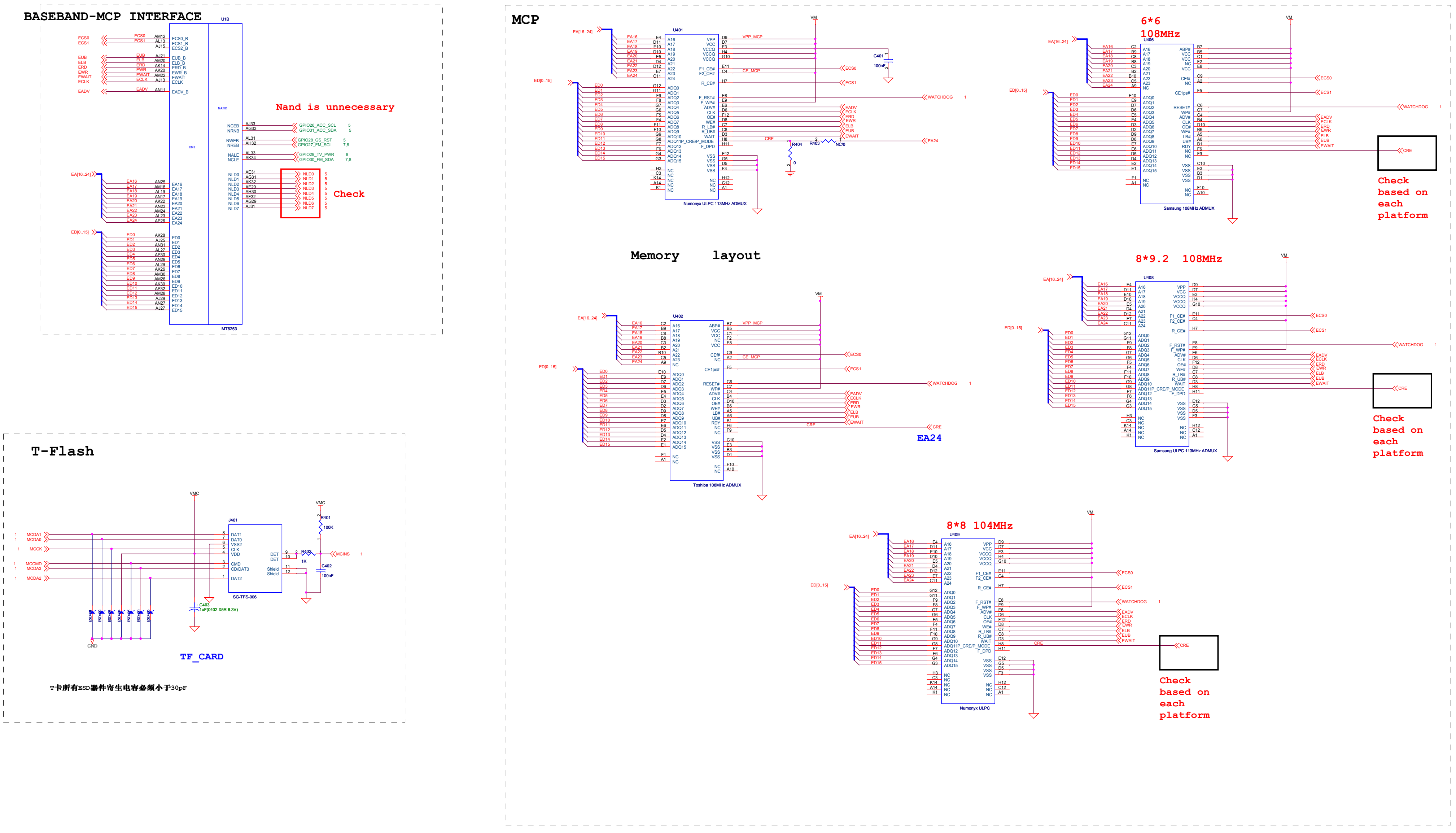

Title	04 Memory, T-Flash
Size A1	Document Number: MT6253 Beta Site Phone
Rev	V3.0
Date:	Tuesday, April 20, 2010
Sheet	4 of 9

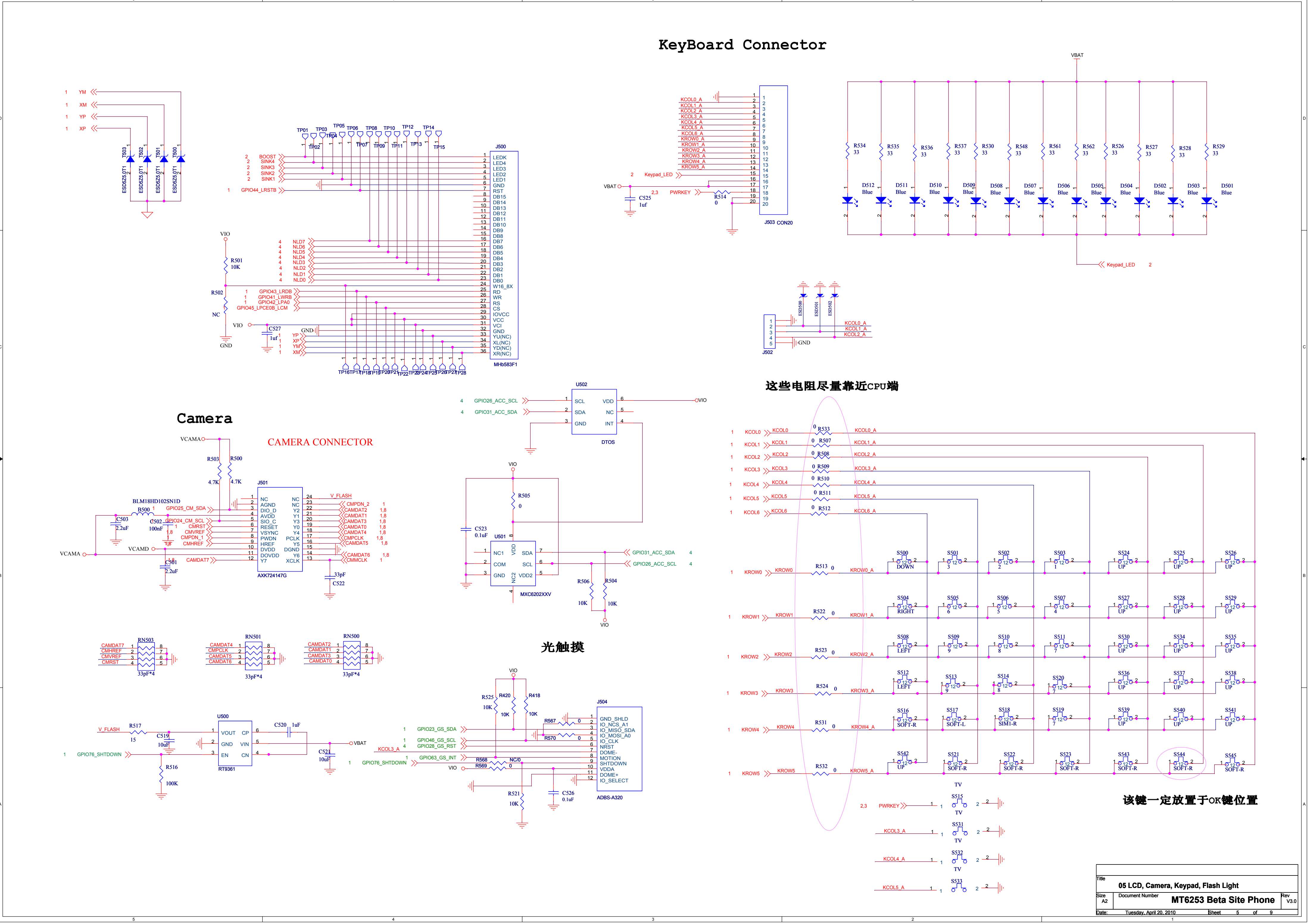
KeyBoard Connector
VBAT
J503 CON20
J502
ESD5Z5.0T1
MHb583F1
J500
Keypad_LED
PWRKEY
这些电阻尽量靠近CPU端
Camera
CAMERA CONNECTOR
J501
AXK724147G
BLM18HD102SN1D
U502
DTOS
U501
MXC6202XXV
光触摸
J504
ADBS-A320
U500
RT9361
该键一定放置于OK键位置
Title
05 LCD, Camera, Keypad, Flash Light
Size A2
Document Number
MT6253 Beta Site Phone
Rev V3.0
Date: Tuesday, April 20, 2010
Sheet 5 of 9

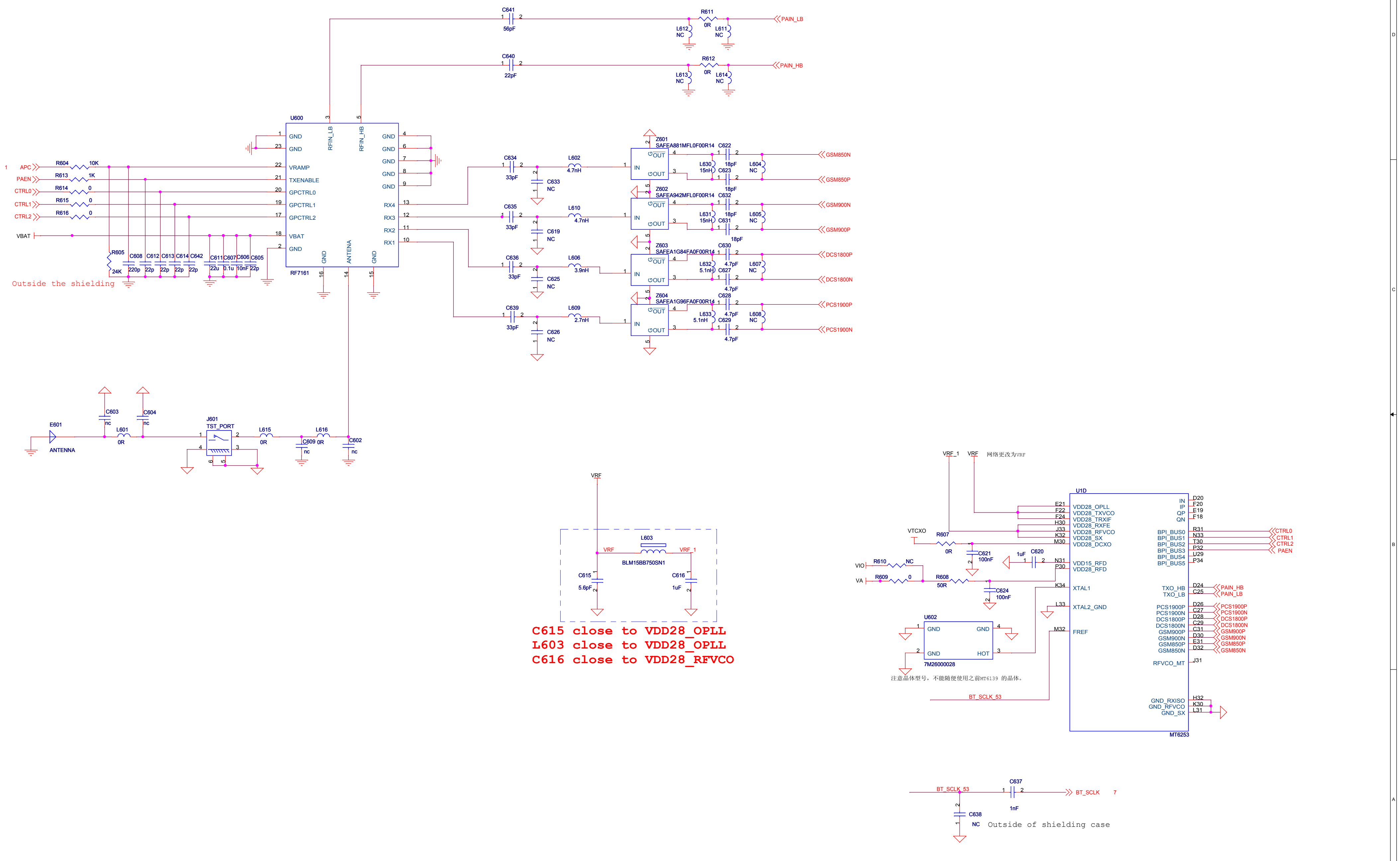

Title	06 2G RF	
Size A2	Document Number: MT6253 Beta Site Phone	Rev V3.0
Date: Tuesday, April 20, 2010	Sheet 6 of 9	

MT6612

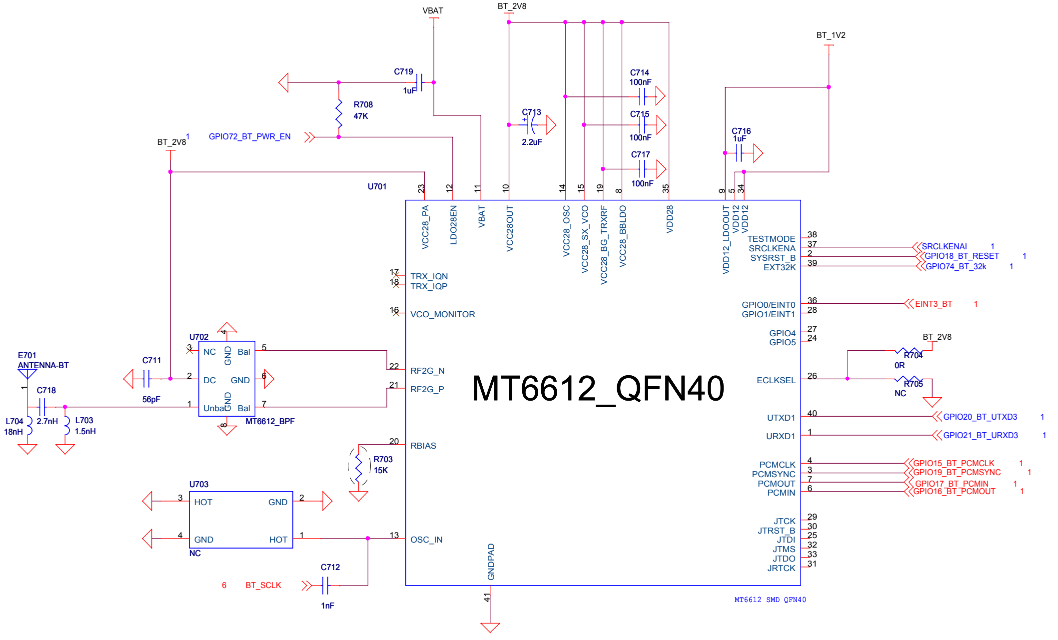

FM AR1010

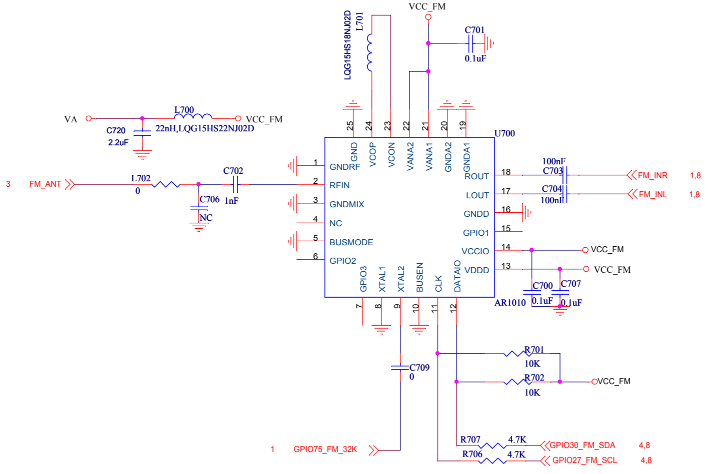

1. If no WIFI, use WIFI_32KHZ to feed FM

2. WIFI, BT, FM 32KHz can't be shared
for each others.

CLK => NLD8
EDIWS ==> GPIO76 , IRDA_PDN
李政(Zheng Li) [10:07]:

王慈鴻(Erwin_Wang) [10:08]:
EDIDAT ==> UTXD2

LZ 0630GPIO24，28用作復用PCM；這里NC.
GPIO4，GPIO5用于處理和Wifi的沖突，這里無WIFI，NC；
GPIO1 used for HW flow control,compatible for other platform.

Title	07 MT6612		
Size A2	Document Number	MT6253 Beta Site Phone	Rev V1.0
Date:	Tuesday, April 20, 2010	Sheet 7 of 9	

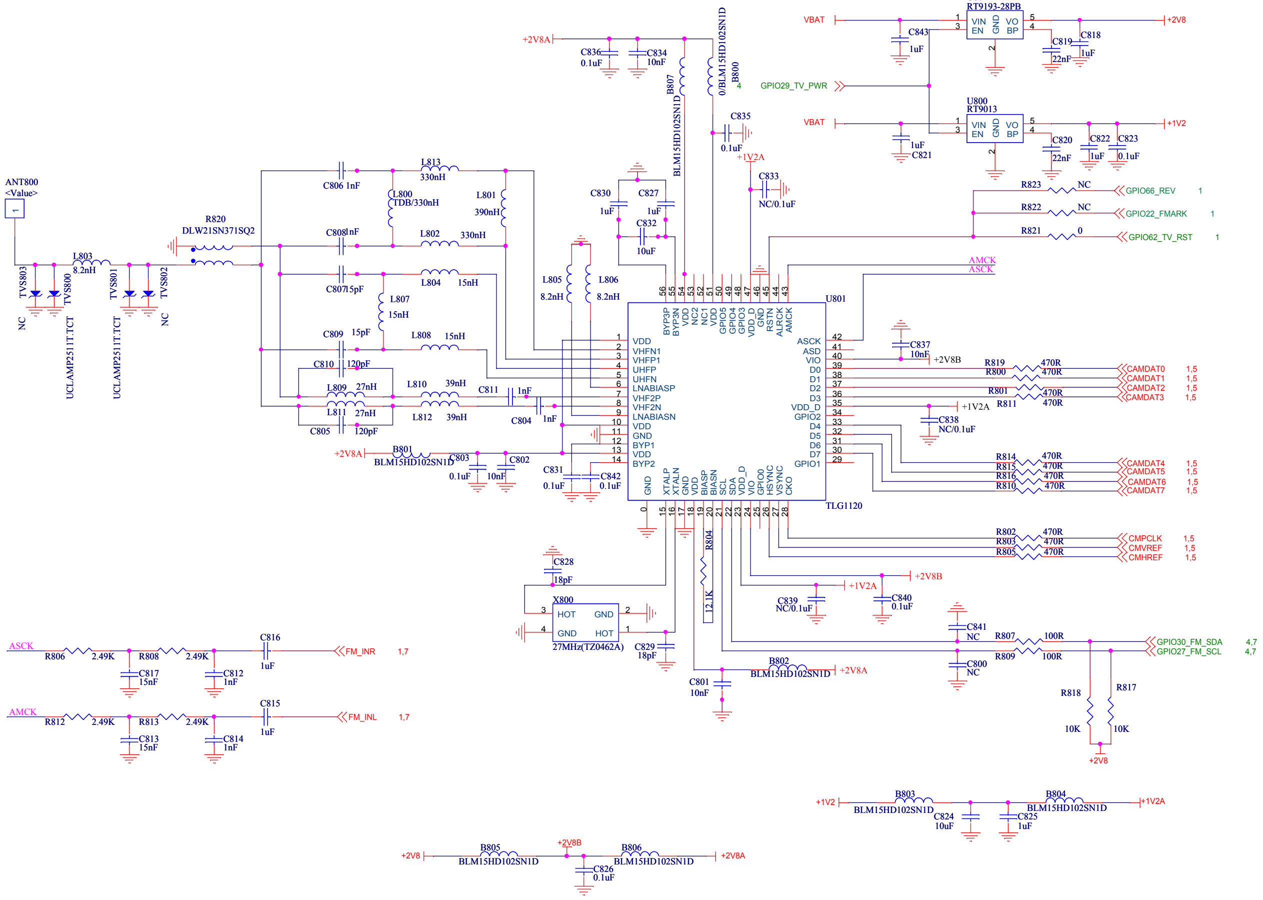

Title	<Title>	
Size A2	Document Number <Doc>	Rev <RevCode>
Date: Tuesday, April 20, 2010	Sheet 8 of 9	

2010/01/29

1. FM 的I2C线上串两个4.7K电阻，R706，R707
2. 电池连接器型号改为：PAN37-03423-1002
3. SIM 卡封装改为：CAF99-06183-1503
4. 耳机接口型号改为：JAF00-06506-0100，以后以此为标准，MTK强烈建议添加3个1nF滤波电容。
5. 删除R316，R317 的兼容，直接把音频线接上去。
6. USB与下载的切换电源改为VIO，控制接口改为GPIO40,删除了几个GPIO的兼容
7. T卡型号改为：SG-TFS-006 1.85mm高
8. TV 的PWR 使能信号改为GPIO29
9. 按键去掉扩展芯片，直接使用CPU按键矩阵。FM的I2C换到GPIO29，GPIO30
10. LCD 使用BL900 上的MHb583F1，更改数据线位置

2010/03/15

（1）MIC电路正负极之间并联100pF (C324)电容

(2) 光电鼠标SHUTDOWN引脚增加下拉电阻10K/R521到地.

(2) 光电鼠标中断脚增加上拉电阻10K/R525到VIO.

2010/04/19

（1）MIC电路更改！

(2)增加两个按键(由 KCOL4_A ,KCOL5_A , GND组成)

(3)S53按键的键值由原来GPIO62+GND 改为KCOL3_A+ GND ，光电鼠的DOME- 由原来的GPIO62 改为KCOL3_A

(4)SIDE KEY 中的KROW5 改为KCOL2_A
5. 蓝牙内部LDO使能添加R708 47K下拉电阻。
6. 3D 传感器做了美芯XV和DTOS的双Lay。
7. 侧键焊盘挪到背面。

Title <Title>		
Size A2	Document Number <Doc>	Rev <RevCode>
Date: Tuesday, April 20, 2010	Sheet 9 of 9	